SUPER B
lithium batteries

Manual

Version
January 2020

NOMIA 12V210Ah

User Manual Nomia 12V210Ah

Dear customer,

This manual contains all the necessary information to install, use and maintain the Nomia 12V210Ah Li-ion battery. We kindly ask you to read this manual carefully before using the product. In this manual, the Nomia 12V210Ah Li-ion battery will be referred to as: the Li-ion battery. This manual is meant for the installer and the user of the Li-ion battery. Only qualified, certified personnel may install and perform maintenance on the Li-ion battery. Please consult the index at the start of this manual to locate information relevant to you.

During the use of the product, user safety should always be ensured, so installers, users, service personnel and third parties can safely use the Li-ion battery.

Copyright© Super B All rights reserved. Licensed software products are owned by Super B or its subsidiaries or suppliers, and are protected by national copyright laws and international treaty provisions. Super B products are covered by Dutch and foreign patents, issued and pending. Information in this publication supersedes that in all previously published material. Specifications and price change privileges reserved. Super B is a registered trademark of Super B.

For more information please contact:

Super B Lithium Power B.V.
Demmersweg 3
7556 BN Hengelo (Ov) The Netherlands
Tel: +31(0)88 00 76 000
E-mail: info@super-b.com
www: www.super-b.com

Table of content

1. Safety guidelines and measures **5**
1.1. General 5
1.2. Disposal 5

2. Introduction **6**
2.1. Product description 6
2.2. Intended use 6
2.3. Glossary of Terminology 6
2.4. Used symbols 6

3. Product specifications **7**
3.1. Product features 7
3.2. Technical specifications 7
3.2.1. Electrical specifications 7
3.2.2. Mechanical specifications 7
3.2.3. Charge & discharge specifications 8
3.2.4. Temperature specifications 8
3.2.5. Compliance specifications 8
3.2.6. General product specifications 8
3.3. Environmental conditions 9
3.4. Scope of delivery 9
3.5. Connections, indicators and battery controls 10
3.5.1. Con 1 (Output for bistable relay) 10
3.5.2. Con 2 (I/O connection 7) 10
3.5.3. Con 3 (CANopen; 5-pin “micro” style connector) 11
3.6. Peripheral equipment 11
3.6.1. Obligatory 11
3.6.2. Optional Components 11

4. Installation **13**
4.1. General information 13
4.2. Unpacking 13
4.3. Preparing the battery for use 13
4.3.1. Placement of the battery 13
4.3.2. Placement and removal of a fuse 14
4.4. Connection wires 15
4.5. Installing the mandatory external disconnect device 15
4.5.1. Connecting a bistable relay to the Li-ion battery 15
4.5.2. Connecting a normal relay as an external disconnect device 16
4.5.3. Using the SB BIB (Battery Interface Box) 17
4.5.4. Using the SB BCI-C1 (Battery Communication Interface) with a normal relay 17
4.6. Connecting the Li-ion battery to the load/charger 18

4.6.1. Connecting a single Li-ion battery to the load/charger with a bistable relay 18
4.6.2. Connecting a single Li-ion battery to the load/charger with a normal relay 19
4.7. Disconnecting the Li-ion battery 20

5. Connecting Li-ion batteries in series and parallel 21
5.1. Connecting Li-ion batteries in series. 21
5.2. Connecting Li-ion batteries in parallel 21
5.3. Connecting Li-ion batteries in series and parallel 22
5.4. CANopen interface 23
5.4.1. CAN Bus network topology 24
5.4.2. Termination Resistors 24
5.4.3. CAN bus power 24
5.4.4. CAN balancing 25

6. Battery use 26
6.1. General information 26
6.2. Charging 26
6.2.1. Battery balancing 26
6.2.2. Reading out the battery's State of Charge (SoC) 26
6.3. Battery Monitoring Software 27
6.3.1. Battery History Recording 27

7. Inspection and cleaning 28
7.1. General information 28
7.2. Inspection 28
7.3. Cleaning 28

8. Storage 29

9. Transportation 29

10. Disposal and recycling 29

11. Troubleshooting 30

12. Warranty and liability 31

1. Safety guidelines and measures

1.1. General

- Do not short-circuit the Li-ion battery.
- Treat the Li-ion battery as described in this manual.
- Do not dismantle, crush, puncture, open or shred the Li-ion battery.
- Do not expose Li-ion battery to heat or fire. Avoid exposure to direct sunlight.
- Do not remove the Li-ion battery from its original packaging until required for use.
- In the event of electrolyte leaking, do not allow the liquid to come in contact with the skin or eyes. If contact has been made, wash the affected area with water and seek medical advice.
- Always use a class 2 charger which is specifically provided for use with a Lithium Iron Phosphate battery (LiFePO4)
- Observe the plus (+) and minus (–) marks on the Li-ion battery and equipment and ensure correct use.
- Do not mix batteries of different manufacture, capacity, size or type.
- Keep the Li-ion battery clean and dry.
- Secondary batteries need to be charged before use. Always use the correct charger and refer this manual for proper charging instructions.
- Do not leave the Li-ion battery on prolonged charge when not in use.
- After extended periods of storage, it may be necessary to charge and discharge the Li-ion battery several times to obtain maximum performance.
- Retain the original product documentation for future reference.
- Disconnect the Li-ion battery from the equipment when not in use.
- Do not charge the Li-ion battery below 0°C

⚠ **Warning!** Keep the Li-ion battery away from water, dust and contamination. Place the Li-ion battery in well ventilated areas.

1.2. Disposal

Dispose the Li-ion battery in accordance with local, state and federal laws and regulations.
Batteries may be returned to the manufacturer.
Do not mix with other (industrial) waste.

2. Introduction

2.1. Product description

The Nomia 12V210Ah is a Lithium Iron Phosphate rechargeable battery. The unique combination of state-of-the art technology and smart software makes this Li-ion battery a robust, safe and easy to use energy storage solution.

The Li-ion battery uses safe Lithium Iron phosphate (LiFePO4) technology. With its integrated battery management system the Li-ion battery is protected from deep discharging, overcharging and overheating.

⚠ **Caution! External disconnect device is required!**

2.2. Intended use

The Nomia 12V210Ah Li-ion battery serves as a energy source of 12V in power systems for recreational vehicles, commercial vehicles, leisure boats, commercial vessels and stationary applications. Potential applications of this Li-ion battery include: off grid power supply, marine power supply, medium for (renewable) energy storage and (traction) battery for vehicles.Use as a starter battery is not possible. Up to 4 batteries can be connected in series or in parallel to increase the total capacity up to 840Ah. For more batteries in series or parallel always consult with Super B.

2.3. Glossary of Terminology

BMS	Battery Managent System
Charge cycle	A period of use from fully charged, to fully discharged, and fully recharged again.
Endurance Life-cycle	The products maximum lifespan, achieved by following the guidelines presented in this manual.
BCI	Battery Communication Interface
BIB	Battery Interface Box
LiFeP04	Lithium Iron Phosphate
SoC	State of charge
CCCV	Constant Current - Constant Voltage
DoD	Depth of Discharge

Table 1. Glossary of Terminology

2.4. Used symbols

The following icons will be used throughout the manual:

⚠ **Warning!** A warning indicates severe damage to the user and/or product may occur when a

procedure is not carried out as described.

⚠ **Caution!** A caution sign indicates problems may occur if a procedure is not carried out as described. It may also serve as a reminder to the user.

3. Product specifications

3.1. Product features

- Traction battery
- Lithium Iron Phosphate (LiFePO4): Safe Li-ion technology
- Integrated BMS (Battery Management System), external disconnect device needed
- Glass fiber reinforced plastic (GRFP) Casing, Aluminum / PE sandwich side panels
- Terminals for 2 x M8 bolts
- Integrated fuse, 32V / 500A
- Maximum continuous discharge 500A
- Wired communication interface: CANopen
- Battery monitoring / History Storage
- Adaptive cell balancing
- Configurable in serial or parallel connection
- Output for bistable relay / latching relay

3.2. Technical specifications

3.2.1. Electrical specifications

Nominal capacity	210Ah
Energy	2688Wh
Nominal voltage	12.8V
Open circuit voltage	13.2V
Self discharge	<3% per month

Table 2. Electrical specifications

3.2.2. Mechanical specifications

Dimensions (LxWxH)	417 x 227 x 314 mm / 16.4" x 8.9" x 12.4"
Weight	23 kg / 50.7 lbs
Case material	GFRP (Glass Fiber Reinforced Plastic)
Ingress protection	IP50
Cell type / chemistry	Prismatic - LiFePO4

Table 3. Mechanical specifications

3.2.3. Charge & discharge specifications

Charge method	CCCV
Charge voltage	14.3V - 14.6V
Max charge current	210A
End of discharge voltage	10V
Discharge current continous	500A[1]
Discharge pulse current (10 sec)	800A

Table 4. Charge and discharge specifications

[1]Limited by fuse

3.2.4. Temperature specifications

Charge temperature	0°C to 55°C / 32°F to 131°F[2]
Discharge temperature	-20°C to 55°C / -4°F to 131°F
Storage temperature short term (<1 month)	-20°C to 45°C / -4°F to 113°F
Storage temperature long term (>1 month)	0°C to 35°C / 32°F to 95°F
Relative humidity	10-90%

Table 5. Temperature specifications

[2]Do not charge the Li-ion battery below 0°C / 32°F

3.2.5. Compliance specifications

Certifications	CE, FCC, UN 38.3, UN ECE R10.05
Shipping classification	UN 3480

Table 6. Compliance specifications

3.2.6. General product specifications

Battery designation	IFpP/36/130/195/[2P4S]M/-20+55/95
Cycle life	>3500 (1C charge/discharge, DoD 100%)[3]

Table 7. General product specifications

[3]The cycle life value given above is an indication at 23°C. The Li-ion battery cycle life depends strongly on temperature and the applied charging and discharging loads.

3.3. Environmental conditions

Warning! The Li-ion battery may only be used in conditions specified in this manual. Exposing the Li-ion battery to conditions outside the specified boundaries may lead to serious damage to the product and/or the user.

Use the Li-ion battery in a dry, clean, dust free, well ventilated space. Do not expose the Li-ion battery to fire, water, solvents or excessive heat.

3.4. Scope of delivery

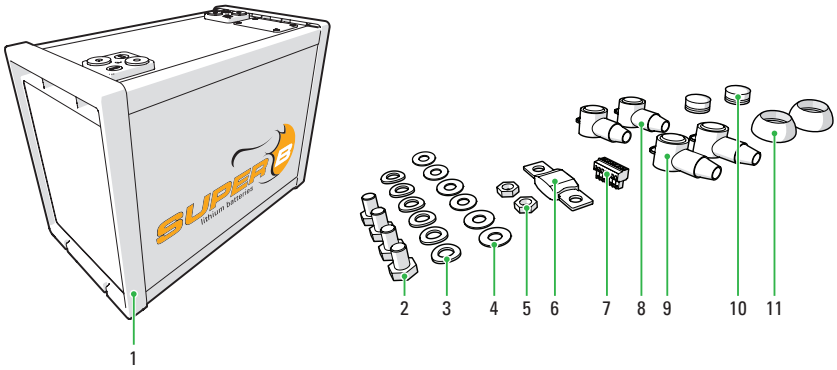

Figure 1. Scope of delivery.

1. (1x) Nomia 12V210Ah lithium battery
2. (4x) M8 Bolt
3. (6x) M8 Spring washer
4. (6x) M8 Plain washer
5. (2x) M8 Nut
6. (1x) Fuse 32V/500A
7. (1x) Phoenix plug 7
8. (2x) Terminal cover, Red
9. (2x) Terminal cover, Black
10. (2x) Terminal protection cap, Red
11. (2x) Terminal protection cap, Black

3.5. Connections, indicators and battery controls

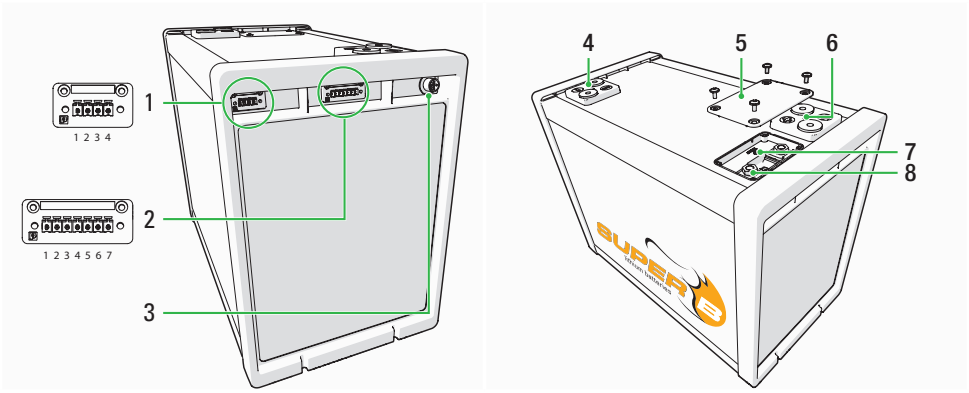

Figure 2. Connections, indicators and battery controls

1. Con 1 (Output for Bistable Relay; Phoenix FRONT-MC 1,5/4-STF-3,81 1850877)
2. Con 2 (I/O Connection 7; Phoenix FRONT-MC 1,5/7-STF-3,81 1850903)
3. Con 3 (CANopen; 5-pin “micro” style connector)
4. Terminal - (2x M8)
5. Fuse cover
6. Terminal + (2x M8)
7. Reset button
8. Fuse connections

3.5.1. Con 1 (Output for bistable relay)

PIN #	Output range (12V dc)	Function
1 - 4	15A (100ms pulse)	+, OFF
1-4	15A (100ms pulse)	-, ON

Table 8. Con 1 (Output for bistable relay)

3.5.2. Con 2 (I/O connection 7)

PIN #	Range	Function
1	max 30 V dc	+ (Plus)
2	0-10 V dc	AN_SOC (Analogue state of charge)
3	NA	Nc (Not connected)

4	5A max 48V dc max	Rc, (Relay common contact)
5		Rnc, (Relay normaly close contact)
6		Rno, (Relay normaly open contact)
7		GND, (Ground)

Table 9. Con 2 (I/O connection 7)

3.5.3. Con 3 (CANopen; 5-pin "micro" style connector)

PIN #	Signal	Description
1	CAN_SHLD	Optional CAN Shield
2	CAN_V+	Optional CAN external positive supply (dedicated for supply of transceiver and optocouplers. if galvanic isolation of the bus node applies)
3	CAN_GND	Ground / 0V
4	CAN_H	CAN_H bus line (dominant high)
5	CAN_L	CAN_L bus line (dominant low)

Table 10. Con 3 (CANopen; 5-pin "micro" style connector)

3.6. Peripheral equipment

3.6.1. Obligatory

In order for the Li-ion battery to be used safely, an external disconnect device must be installed. This should either be a relay or latching relay (bistable) controlled by the battery's BMS or a relay or latching relay controlled by a remote switch (CAN controlled). If an external disconnect device is not installed the warranty of the Li-ion battery will be void. It will lead to serious damage to the Li-ion battery and can lead to high risks for safety and environment.

3.6.2. Optional Components

The Li-ion battery can be used in combination with a number of (Super B) products:

Description	Article name	EAN code
SB-LIR250 (relay)	SB-LIR250 (relay)	8718531361126
Bistable relay	SB-V23130C2021A412-TE (latching relay)	8718531361010
Terminator Resistor Female	SB CAN Terminator Resistor Female	8718531360808

Terminator Resistor Male	SB CAN Terminator Resistor Male	8718531360815
CAN Male-female Cable 0.6m	SB CAN Male-female Cable 0.6m	8718531360716
CAN Male-female Cable 1m	SB CAN Male-female Cable 1m	8718531360723
CAN Male-female Cable 2m	SB CAN Male-female Cable 2m	8718531360730
CAN Male-female Cable 5m	SB CAN Male-female Cable 5m	8718531360747
CAN Male-female Cable 10m	SB CAN Male-female Cable 10m	8718531360754
T-splitter	SB CAN T-splitter	8718531360761
Battery Interface Box	SB BIB LV48V350A	8718531360914
Battery Interface Box	SB BIB LV48V600A	8718531360921
USB to CAN	CAN Compact to USB	8718531361201
Battery monitor	SB Monitor Software	
Mounting bracket ZC casing	SB Battery Bracket for Nomia 12V100Ah, 12V210Ah and 12V210Ah	8718531360693
Battery Communication Interface	SB BCI-C1	8718531360884
Touch Display	Touch Display	8718531361447
Touch Display + Cable	Touch Display + Cable	8718531361447
BM01 Battery monitor	SB BM01 12-24V	8718531361041
BM01 Battery monitor cable	SB BM 01 Cable 2.5m 12-24V only	8718531361225
BM01 Battery monitor cable	SB BM 01 Cable 5m 12-24V only	8718531361232
BM01 Battery monitor cable	SB BM01 Cable 10m 12-24V only	8718531361249

Table 11. Optional components that can be used with the **Li-ion** battery

4. Installation

4.1. General information

⚠ **Warning!** Never install or use a damaged Li-ion battery.

⚠ **Caution!** Do not reverse connect the Li-ion battery (polarity).

When connecting several batteries in series or parallel, always use batteries of the same brand, type, age, capacity and state of charge.

4.2. Unpacking

Check the Li-ion battery for damage after unpacking. If the Li-ion battery is damaged, contact your reseller or Super B. Do not install or use the Li-ion battery if it is damaged!

4.3. Preparing the battery for use

⚠ **Caution!** Do not operate the Li-ion battery beyond published maximum specifications.

⚠ **Caution!** Charging at deep discharge conditions can lead to venting, excessive heat or thermal runaway of the cells.

⚠ **Caution!** This Li-ion battery stores fault conditions internally, like excessive charge current or deep discharge situations. Super B uses this information in the warranty process.

⚠ **Warning!** Do not overcharge the Li-ion battery.

4.3.1. Placement of the battery

Before it is used, the Li-ion battery must be positioned in such a way that it will not move around in its compartment during use. The Li-on battery may be placed on its side, but not upside down. If necessary, the Li-ion battery may be fixed in place by means of Super B mounting brackets. The brackets can be screwed in place by means of bolts or screws (see figure 3).

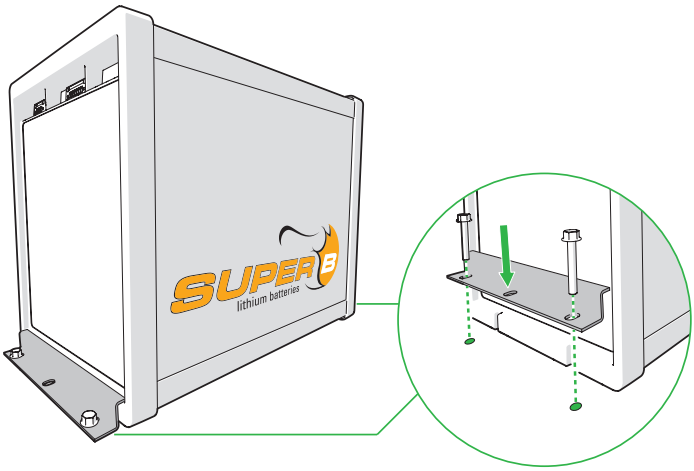

Figure 3. Installing the Li-ion battery using the Super B mounting brackets

4.3.2. Placement and removal of a fuse

Before the Li-ion battery can be used, the internal fuse needs to be installed. The 32V/500A fuse is supplied with the Li-ion battery.

Use the following steps to (re)place the fuse in the Li-ion battery (see figure 4):

1. Disconnect the negative wire from the - pole of the Li-ion battery (see paragraph 4.5. for the details).
2. Disconnect the positive wire from the + pole of the Li-ion battery.
3. Unscrew the fuse cover using the TORX key.
4. Unscrew the fuse contacts using a 13mm wrench.
   ⚠ **Warning!** Short circuit danger! Avoid making a short circuit with the wrench
5. Place the (new) fuse between the contacts, place washers and spring washers and tighten the fuse contact points to 13Nm.
6. Fasten the fuse cover.
7. Proceed to paragraph 4.5 to read the instructions on installing the Li-ion battery in an electrical circuit.

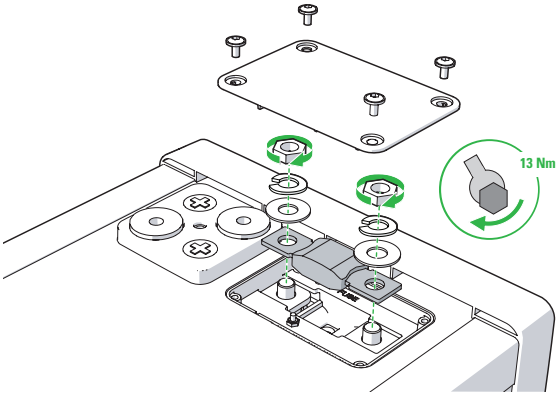

Figure 4. Install a fuse

4.4. Connection wires

Use appropriate wire for the connection wires to prevent overheating and unnecessary losses. Use appropriate fuses matching the wires and load. Super B suggests to use a 95mm2 connection wires. Connection wires with smaller diameters can cause overheating or unnecessary losses.

4.5. Installing the mandatory external disconnect device

⚠ **Warning!** Always connect the relay between the + or - terminal of the battery and the load.

⚠ **Warning!** Never use the Li-ion battery without a properly installed external disconnect device (relay or bistable relay).

Protecting the Li-ion battery is possible by one of the following ways:

1. Connect a bistable relay to the Li-ion battery's Con1 output.
2. Connect a normal relay to the Li-ion battery's Con2 (I/O connection 7) output.
3. By using the SB BIB (Battery Interface Box).
4. By using the SB BCI-C1 (Battery Communication Interface) and a normal relay.

4.5.1. Connecting a bistable relay to the Li-ion battery

1. When using a bistable relay connect it to Con1 output as displayed in figure 5.
   The Con1 output controls both the ON coil and the OFF coil of the bistable relay. The output of Con1 can be found in table 8.

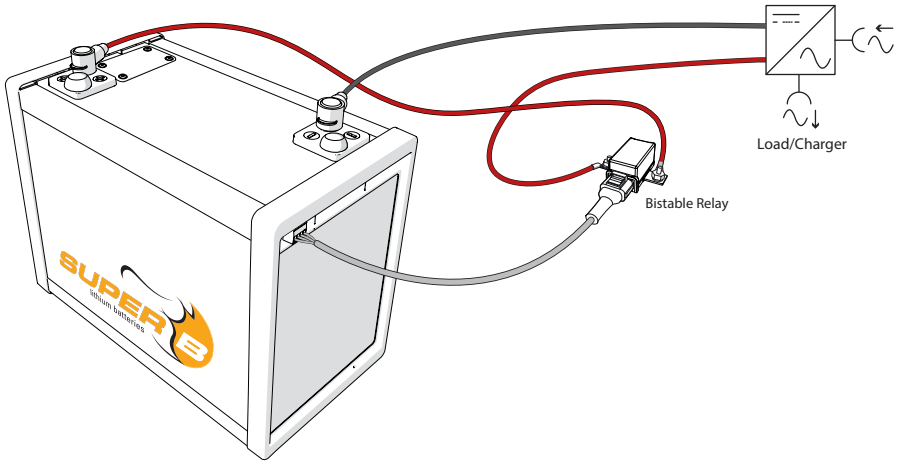

Figure 5. Connect a bistable relay as an external disconnect device

4.5.2. Connecting a normal relay as an external disconnect device

1. When using a normal relay, connect it to Con 2 (I/O Connection 7), Pin 4 (Rc) and Pin 5 (Rnc) as displayed in figure 6.

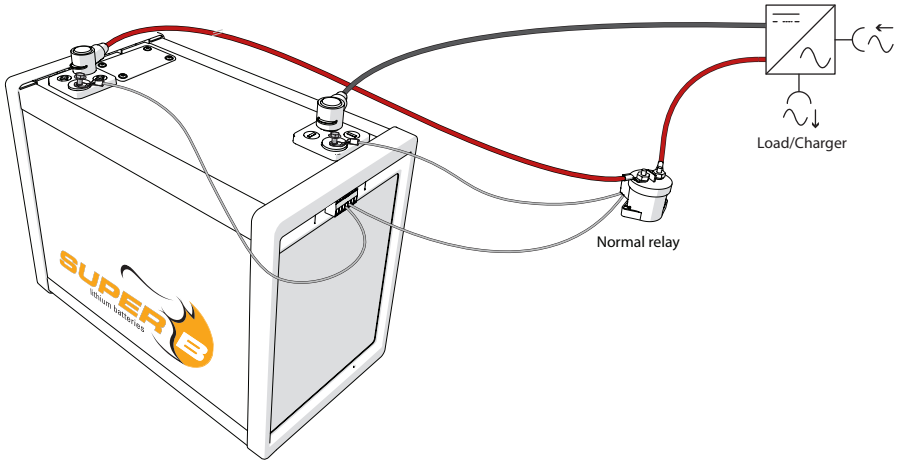

Figure 6. Connect a normal relay as an external disconnect device.

4.5.3. Using the SB BIB (Battery Interface Box)

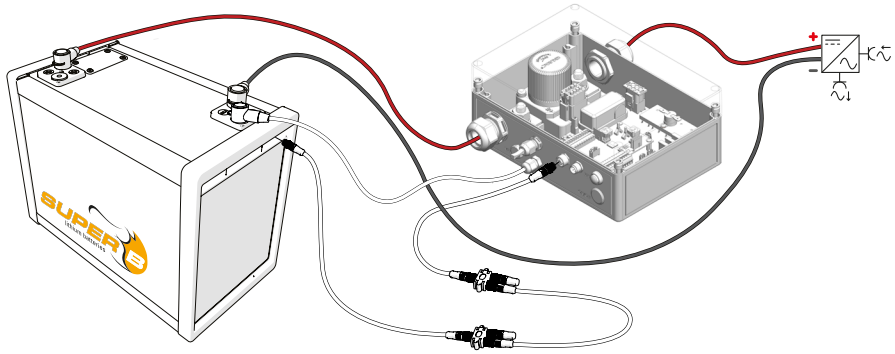

Figure 7. Connecting a Li-ion battery to the SB BIB

Consult with Super B for the SB BIB installation instructions.

4.5.4. Using the SB BCI-C1 (Battery Communication Interface) with a normal relay

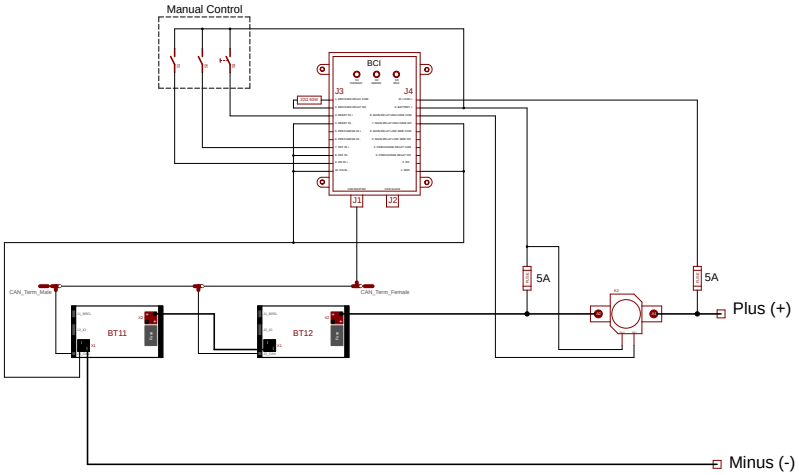

Figure 8. Connecting a Li-ion battery to the SB BCI-C1

Consult with Super B for the SB BCI-C1 installation instructions.

4.6. Connecting the Li-ion battery to the load/charger

4.6.1. Connecting a single Li-ion battery to the load/charger with a bistable relay

⚠ **Warning!** Ensure you have completed all the previous steps described in chapter 4.5 before connecting the battery to the load/charger.

1. Slide the terminal covers over the connection wires.
2. Connect the + terminal of the battery to the - or B terminal of the relay (see figure 9).
3. Connect the load or charger to the + or A terminal of the relay.
4. Connect the - terminal of the battery. Do not connect the - terminal first as this may lead to short circuits (Figure 10).
5. Ensure both contacts are tightened to 20 Nm. The contacts of the bistable relay must be tightened to max 13 Nm.
6. Place the terminal covers over the terminals (see figure 10).
7. Press the reset button for 10-15 seconds after connecting the bistable relay to Con1 output.(the reset button is located under the fuse cover). The bistable relay contacts will be turned off and on, this is to make sure that the bistable relay is ON

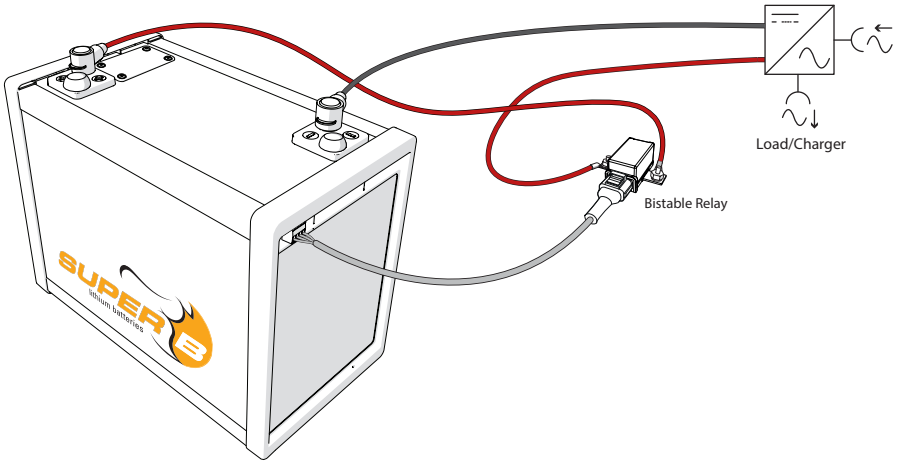

Figure 9. Connecting the battery to the load

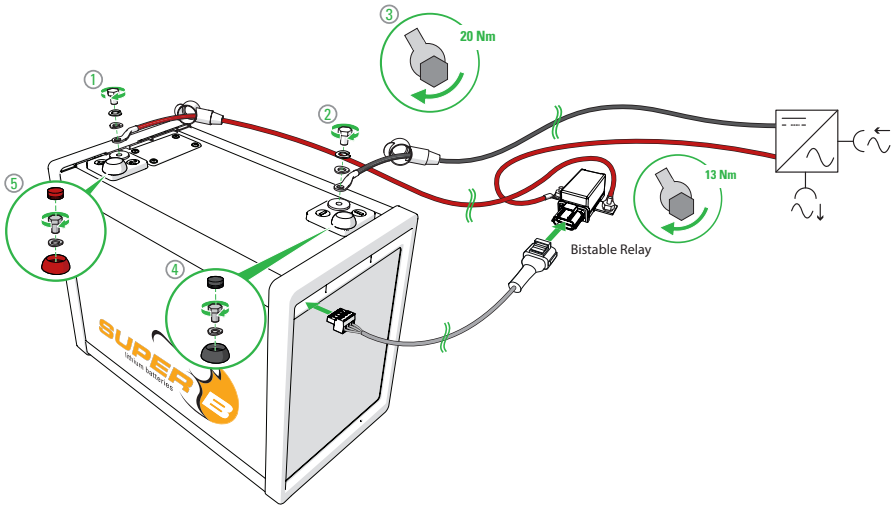

Figure 10. Securing the terminal covers

4.6.2. Connecting a single Li-ion battery to the load/charger with a normal relay

⚠ **Warning!** Ensure you have completed all the previous steps described in chapter 4.5 before connecting the battery to the load/charger.

1. Slide the terminal covers over the connection wires.
2. Connect the terminal of the battery to the terminal of the relay (see figure 11):
   - TE EV250: Connect the (+) terminal of the battery to the (+) terminal of the relay.
   - GIGAVac GX14 / GX16 series: Connect the (+) terminal of the battery to the A2 terminal of the relay.
3. Connect the load / charger to the terminal of the relay:
   - TE EV250: Connect the load or charger to the A- terminal of the relay.
   - GIGAVac GX14 / GX16 series: Connect the load or charger to the A1 terminal of the relay.
4. Connect the - terminal of the battery. Do not connect the - terminal first as this may lead to short circuits (see figure 12).
5. Ensure both contacts are tightened to 20Nm and the contacts for the normal relay:
   - TE EV250: 8,8 to 11 Nm
   - GIGAVac GX14: 14 to 20 Nm
   - GIGAVac GX16: 23 to 34 Nm
6. Place the terminal covers over the terminals (see figure 12).

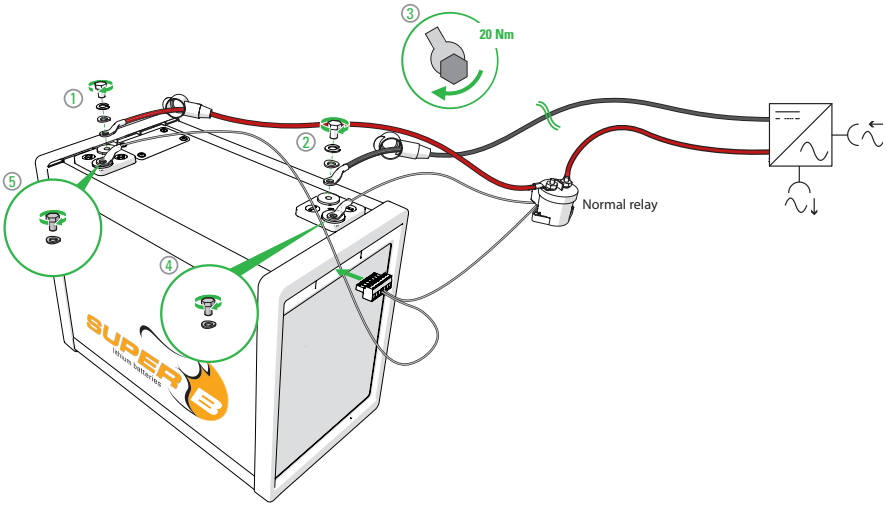

Figure 11. Connecting the battery to the load.

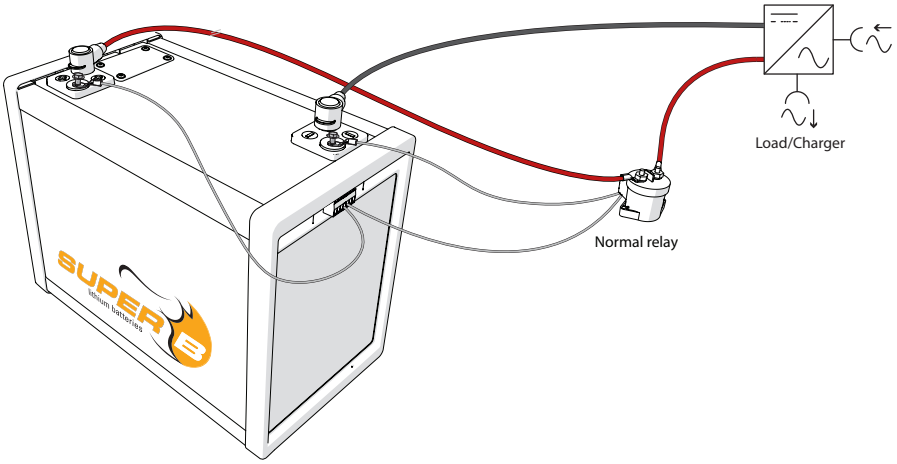

Figure 12. Securing the terminal covers.

4.7. Disconnecting the Li-ion battery

1. Turn off any device or charger the Li-ion battery is connected to.
2. Disconnect the negative wire from the - terminal of the Li-ion battery.
3. Disconnect the positive wire from the + terminal of the Li-ion battery.

5. Connecting Li-ion batteries in series and parallel

5.1. Connecting Li-ion batteries in series.

⚠ **Caution!** Before connecting 2 or more Li-ion batteries in series, the Li-ion batteries must be charged to 100% SoC.

⚠ **Caution!** Before connecting 2 or more batteries in series, always consult Super B

⚠ **Caution!** Depending on the installation a precharge circuit is needed. For further information consult Super B or your dealer.

When using Li-ion batteries in series configuration CAN balancing is required (see paragraph 5.4.4).

The CAN power cable is necessary for CAN balancing.

In installations with more than 2 batteries in series the CAN power cable shall be powered from an external 24V power supply. The external voltage on the CAN power cable shall not be higher than 28.8 Vdc

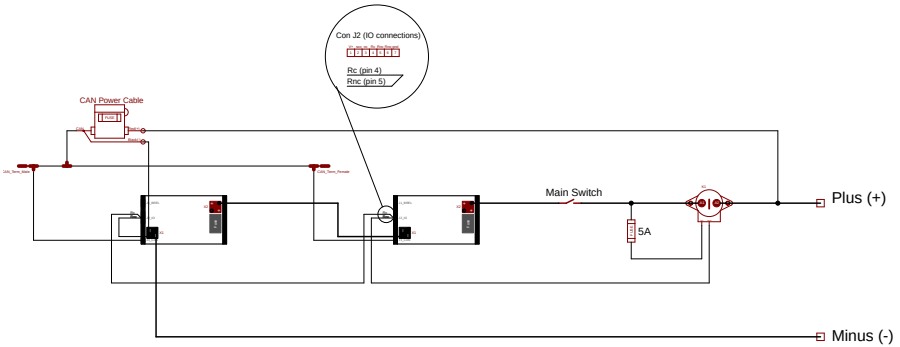

Figure 13. Batteries connected in series with CAN power cable, external disconnect device and external power supply.

5.2. Connecting Li-ion batteries in parallel

⚠ **Caution!** Before connecting 2 or more Li-ion batteries in parallel, the Li-ion batteries must be charged to 100% SoC.

⚠ **Caution!** For more than 4 Li-ion batteries in parallel connection consult Super B or your dealer.

⚠ **Caution!** Depending on the installation a precharge circuit is needed. For further information consult Super B or your dealer.

⚠ **Caution!** When batteries are placed in parallel configuration, the used relay should be suitable for the current used by the application.

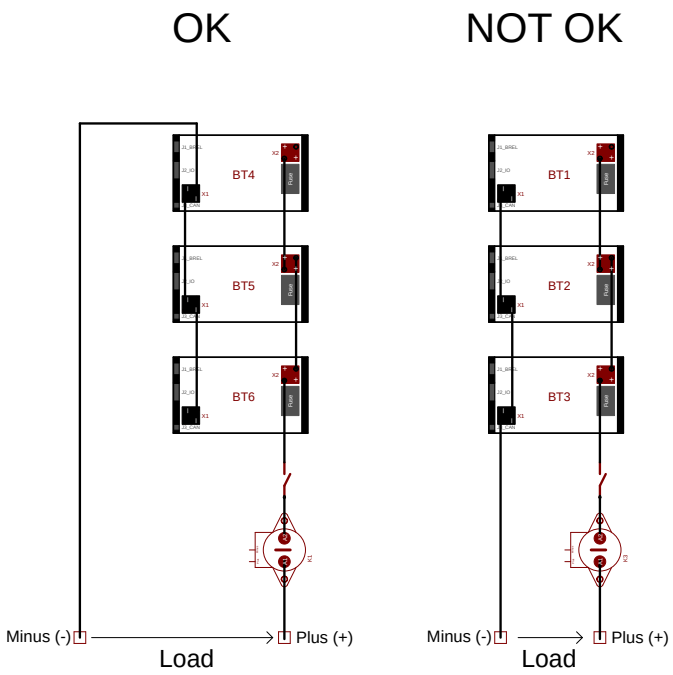

Figure 14. Three Li-ion batteries in parallel with external disconnect device

OK: Equally divided battery current.
All batteries contribute equally to the current into the load.

NOT OK: Current not equally divided.
Batteries closest to load will have the highest contribution to the current into the load.
Whereas batteries further away from load will have lesser current contribution.
Wear and tear will be higher on the Li-ion battery close to the load.

When using Li-ion batteries in parallel configuration CAN balancing is not required.

5.3. Connecting Li-ion batteries in series and parallel

⚠ **Caution!** Before connecting 2 or more Li-ion batteries in series and parallel, the Li-ion batteries must be charged to 100% SoC.

⚠ **Caution!** For more than 4 Li-ion batteries in series and parallel connection consult Super B or your dealer.
⚠ **Caution!** Depending on the installation a precharge circuit is needed. For further information consult Super B or your dealer.
When using Li-ion batteries in series and parallel configuration CAN balancing is required (see paragraph 5.4.4).
The CAN power cable is necessary for CAN balancing.
In installations with more than 2 batteries in series the CAN power cable should be powered from an external 24V power supply.

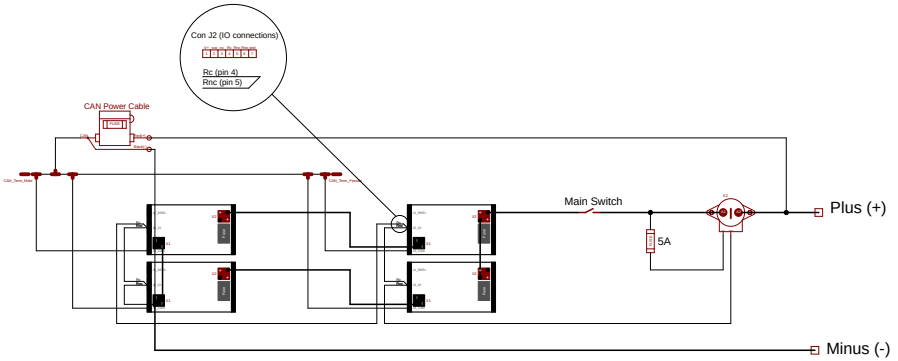

Figure 15. Four Li-ion batteries in a series - parallel connection with external disconnect device and without external power supply

5.4. CANopen interface

The CANopen interface of the Li-ion battery must be used for CAN balancing and can be used for monitoring purposes.

The Li-ion battery can be monitored using the Battery Monitor software and the touch screen display.

To use the Battery Monitoring Software, the CAN bus of the Li-ion battery (CON 3) needs to be connected by means of CAN-to-USB interface to the computer on which the monitoring software and the usb drivers are installed.

More information about the CANopen bus can be found at the CiA website: www.can-cia.org.

5.4.1. CAN Bus network topology

The CAN Bus must be used in a bus network topology. Do not use a ring- or a star topology. The maximum CAN bus length is limited. The Li-ion battery has a fixed bitrate of 250kbps.

In table 12 is an overview of these restrictions.

Bit rate	Bus length (L)	Max. stub length (S)	Accumulated stub length
250 kbps	250 m	11 m	55 m

Table 12. CAN bus speed

5.4.2. Termination Resistors

The CAN bus requires termination at the two ends of the bus. The USB-to-CAN interface may be connected anywhere to the CAN bus.

Use termination resistors at the end nodes to prevent reflections on the line. The value of this resistor should be +/- 120 ohms.

5.4.3. CAN bus power

Due to the galvanic isolation between the BMS and the Li-ion battery's CAN interface an external power supply is needed on the CAN bus.

The CAN bus can be powered through Con 2 (I/O Connection 7) or the CAN power cable (see figure 17).
This situation may occur when a USB-to CAN interface is directly connected to the Li-ion battery (see figure 16).

1. Connect Pin 1 of Con2 to the + terminal of the Li-ion battery.
2. Connect Pin 7 of Con2 to the - terminal of the Li-ion battery.

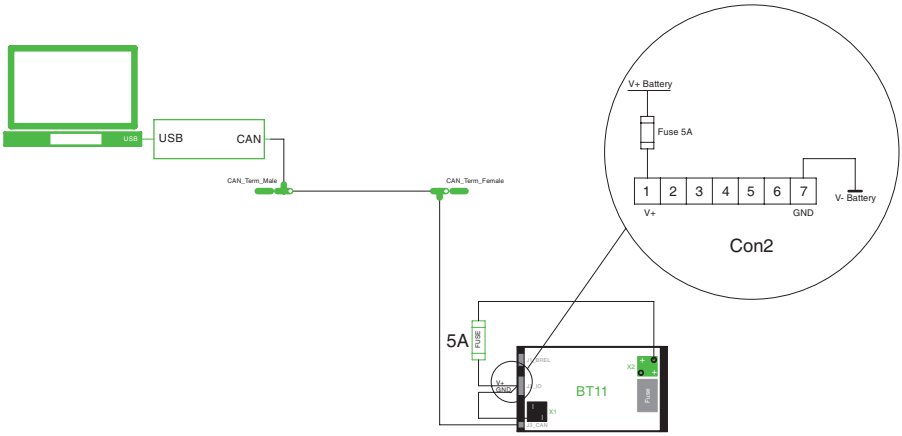

Figure 16. Use Con2 to power the CAN bus

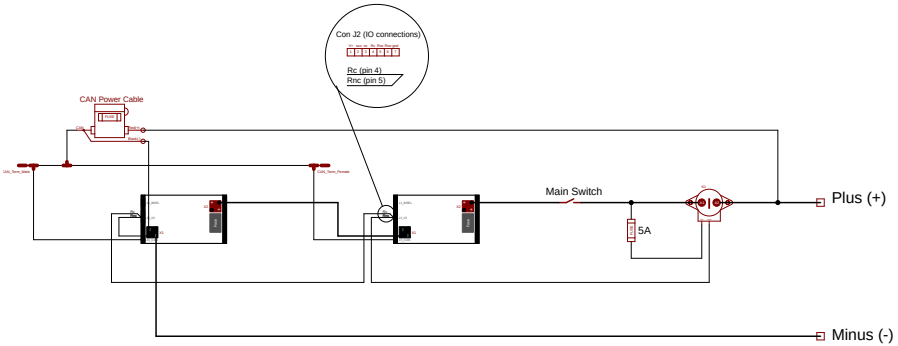

Figure 17. Use of CAN power cable to power the CAN bus

5.4.4. CAN balancing

When the Li-ion battery is connected in a series configuration CAN balancing is required. CAN balancing makes sure that all batteries are balanced properly. For this it is necessary that the batteries must communicate with each other. Therefore the CAN bus is used.

CAN balancing works with SB BCI-C1/SB BIB and without SB BCI-C1/SB BIB up to 8 batteries. Consult with Super B for more CAN balancing configurations.

6. Battery use

6.1. General information

⚠ **Warning!** Always use an external disconnect device.

⚠ **Warning!** In case of an undervoltage shutdown the charging current must be very low until a safe voltage is achieved.

⚠ **Warning!** Follow the safety guidelines and measures of chapter 1.

⚠ **Caution!** Charge the Li-ion battery before use.

6.2. Charging

⚠ **Warning!** Never charge the Li-ion battery with a charging current larger than 1C.

⚠ **Warning!** Stop charging in case the Li-ion battery switches into alarm mode (the external disconnect device will switch off).

⚠ **Caution!** To charge the Li-ion battery, use a charger which is suitable for charging Lithium Iron Phosphate batteries.

1. Connect the charger to the Li-ion battery as described in paragraph 4.6.
2. Charge the Li-ion battery in case of an under-voltage shutdown or if the state of charge drops below 20% to preserve the lifespan of the Li-ion battery.

6.2.1. Battery balancing

During the batteries lifespan, the cells within the Li-ion battery may be unbalanced due to high discharge currents and short float charge periods. This may result in a loss of capacity and unbalanced cells. Cells may be balanced by means of the following procedure:

Apply a constant voltage of 14.4V and a current between 1A and 2A to manually balance the Li-ion battery.

6.2.2. Reading out the battery's State of Charge (SoC)

The Li-ion battery's State of Charge can be read out either by using the BM01, Touch Display, CAN network, or by the analogue output (see further instructions below).

1. Connect Pin1 of Con2 to the Li-ion battery's + pole.
2. Connect Pin 7 of Con2 to ground.
3. Determine the voltage at Pin 2 of CON2 (see figure 18).
   The analog SoC output ranges from 0 to 10 volt, in which 0V corresponds with 0% SoC and 10V corresponds with 100% SoC.
4. Recalibration of the SoC occurs when the battery is completely charged.

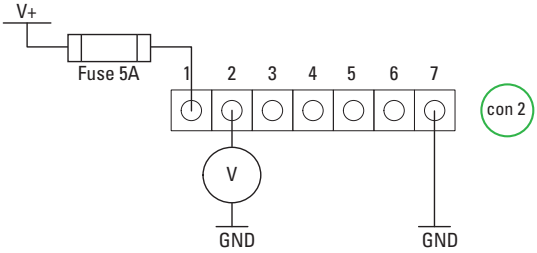

Figure 18. Determining the batteries SoC

6.3. Battery Monitoring Software

Battery monitoring software offers the possibility to continuously monitor a number of the Li-ion battery properties through sensors within the Li-ion battery. It also enables one to download a complete recording of the Li-ion battery's properties over time.
The Battery Monitoring software and the hardware are not included with the Li-ion battery. An overview of these products is given in paragraph 3.6.2.

6.3.1. Battery History Recording

The battery history can be downloaded with the Battery Monitor software. This recording can only be accessed by a reseller or Super B for evaluation.

7. Inspection and cleaning

7.1. General information

⚠ **Warning!** Never attempt to open or dismantle the Li-ion battery! The inside of the Li-ion battery does not contain serviceable parts.

1. Disconnect the Li-ion battery from all loads and charging devices before performing cleaning and maintenance activities (see paragraph 4.7).
2. Remove the fuse or dummy fuse before cleaning and maintenance activities (see paragraph 4.3.2).
3. Place the enclosed protective caps over the terminals before cleaning and maintenance activities to avoid the risk of contacting the terminals.

7.2. Inspection

1. Inspect for loose and/or damaged wiring and contacts, cracks, deformations, leakage or damage of any other kind. If damage to the Li-ion battery is found, it must be replaced. Do not attempt to charge or use a damaged Li-ion battery. Do not touch the liquid from a ruptured Li-ion battery.
2. Observe and note the run time that a new, fully-charged Li-ion battery provides for powering your product. Use this new Li-ion battery run time as a basis to compare run times for older batteries. The run time of the Li-ion battery will vary depending on the products' configuration and the application it is used for.
3. Routinely check the Li-ion battery's SOC. Lithium Iron Phosphate batteries continue to slowly self-discharge (<3% per month) when not in use or stored.
4. Consider replacing the Li-ion battery with a new one if you note either of the following conditions:
   - The Li-ion battery run time drops below about 80% of the original run time.
   - The Li-ion battery charge time increases significantly.

7.3. Cleaning

If necessary, clean the Li-ion battery with a soft, dry cloth. Never use liquids, solvents, or abrasives to clean the Li-ion battery.

8. Storage

Follow the storage instructions in this manual to optimize the lifespan of the Li-ion battery during storage. If these instructions are not followed and the Li-ion battery has no charge remaining when it is checked, consider it to be damaged. Do not attempt to recharge or use it. Replace it with a new Li-ion battery.
See paragraph 3.2.4 for storage temperature conditions.
The self-discharge of the Li-ion battery is <3% per month.

1. Charge or discharge the Li-ion battery to 50% of its capacity before storage.
2. Disconnect the Li-ion battery from all loads and, if present, the charging device.
3. Remove the fuse from the Li-ion battery during storage (see paragraph 4.3.2).
4. Place the terminal covers over the Li-ion battery's terminals during storage.
5. Charge the Li-ion battery to 50% of its capacity every year.

9. Transportation

Always check all applicable local, national, and international regulations before transporting a Lithium Iron Phosphate battery.

Transporting an end-of-life, damaged, or recalled Li-ion battery may, in certain cases, be specifically limited or prohibited.
The transport of the Li-ion battery falls under hazard class UN3480, class 9. For transport over water, air and land, the Li-ion battery falls within packaging group PI965 Section II.

10. Disposal and recycling

Always discharge the Li-ion battery before disposal. Use electrical tape or other approved covering over the Li-ion battery connection points to prevent short circuits.
Battery recycling is encouraged. Dispose of the Li-ion battery in accordance with local, state and federal laws and regulations. Batteries may be returned to the manufacturer.

11. Troubleshooting

Problem	Possible reason	Solution
The capacity of the Li-ion battery has decreased	The cells within the batteries are not properly balanced or the Li-ion battery is worn out.	Perform one full charge cycle to balance the cells (see chapter 5 for balancing).
The Li-ion battery cannot be charged / discharged	The fuse of the Li-ion battery is not installed	Install the fuse; follow the procedures described in paragraph 4.3.2.
	The fuse in the Li-ion battery is broken.	Disconnect all loads and chargers, check and correct for short circuits and defects. Then replace the fuse; follow the procedures described in paragraph 4.3.2.
	The Li-ion battery has been deeply discharged. The BMS is now in “fault condition”.	Disconnect all loads and connect a charger to the Li-ion battery. Then press the reset button for at least 10-15 seconds to resolve the “fault condition”(see paragraph 3.5)..
	The Li-ion battery has been overcharged. The BMS is now in “fault condition”.	Disconnect the charger from the Li-ion battery and press the reset button for at least 10-15 seconds to resolve the “fault condition” (see paragraph 2.7)..
	The Li-ion battery has overheated. The BMS is now in “fault condition”.	Disconnect the charger and all loads and wait for the Li-ion battery to cool down. Then press the reset button for at least 10-15 seconds to resolve the “fault condition” (see paragraph 3.5)..

Table 13. Troubleshooting

12. Warranty and liability

12.1 Upon delivery the customer is obliged to immediately verify whether the products have been damaged during transport. In the event that any such damage has arisen, the customer must notify Super B thereof as soon as possible, in any event no later than three (3) days of delivery, by means of accurate, written statement, stating the damage and where possible a photograph. Failure to inspect the products and inform Super B within the stated time or the use of the products at any time shall be conclusive evidence that Super B has satisfactorily tendered delivery.

12.2 In the event that the customer demonstrates that any of the delivered products do not conform to the agreement, Super B (at its option, upon having received those products returned by the customer) has the option to either repair or replace such products by new products, or to refund the invoice value, exclusive of any dispatch costs.

12.3 Super B grants a three year limited warranty for damages caused by manufacturing defects starting at the time of delivery. Damages caused by manufacturing defects do not include damage resulting from (a) general wear and tear, (b) short circuit, (c) overcharging, (d) deep discharging, (e) overheating of Super B products (f) installation of the Super B product by persons unskilled to work with electro-technical devices or components, (g) any other wrongful use contrary to the Super B's user manual or the safety instruction, (h) any use contrary to the product specifications of that product; (i) any acts of force majeure.

12.4 The warranty period for parts of the product which have been repaired or replaced under the warranty, shall be twelve (12) months from the date of repair or delivery of the replacement.

12.5 Except as specified in the clause 12.3 and 12.4 Super B makes no warranty, whether express or implied, including without limitation any implied warranty of merchantability and fitness for a particular purpose or any warranty arising from any course of dealing, course of performance or usage of trade and specifically disclaims any representation or warranty that the product will meet customer's requirements, perform any specific function or achieve a desired result other than expressly stated by Super B in writing.

12.6 Any liability to the customer in any case ceases to apply in the event that the customer fails to notify Super B of the existence of the defect within ten (10) days of having discovered the defect, in writing, in order to enable Super B to investigate the damage. Some of Super B's products electronically store usage data, including charging/discharging data, in order to enable Super B to analyse such data retroactively when investigating damage.

12.7 Any liability of Super B for damage suffered by the customer is in any case limited to the invoice amount of the relevant products, unless such damage has been caused by gross negligence or willful misconduct of Super B. Super B can never be held liable for (a) damage caused by any of the circumstances mentioned in clause 12.3, leading to damage to the Super B products or to any other device located near those products, or (b) consequential damage, including but not limited to loss of profit, loss of production, loss of business interruption, loss of product and loss of capacity irrespective of the cause of such consequential loss or (c) goodwill.

12.8 To the extent that a court determines that the limitation of liability as meant in clause 12.7 cannot be invoked against a particular claim for damages by the customer, Super B's liability for loss of property, damage to property, and bodily injury (including death) caused by the application of those particular Super B products shall in any event be limited to the amount actually paid out by Super B's insurance company to Super B in accordance with the insurance cover of that insurance policy for that particular type of damage. Super B has taken out insurance against certain risks, as described in the respective insurance policies. These policies contain a usual limitation of insurance payment to be paid out to Super B if, and to the extent that, the event is a covered event.

SUPER B
lithium batteries

For more information please contact:

Super B Lithium Power B.V.
Demmersweg 3
7556 BN Hengelo (Ov)
The Netherlands

Tel: +31 (0)88 0076 000
E-mail: info@super-b.com
www: www.super-b.com

Manual January 2020